PUSH

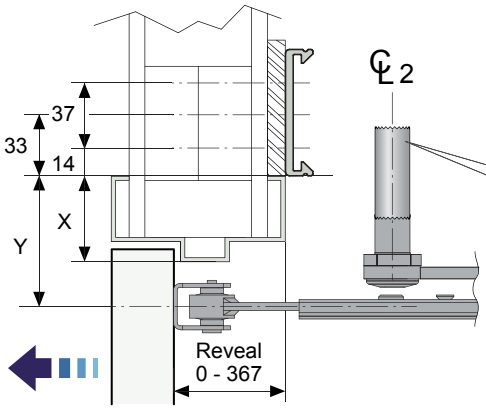

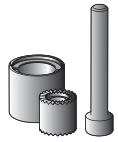

	X	Y
–	2 – 25	51
20	25 – 45	71
50	45 – 75	101
70	75 – 95	121

DIN Right

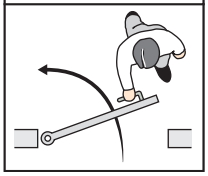

PSW250, Size7 PUSH335

https://s3m.io/j0Zu5

10:44

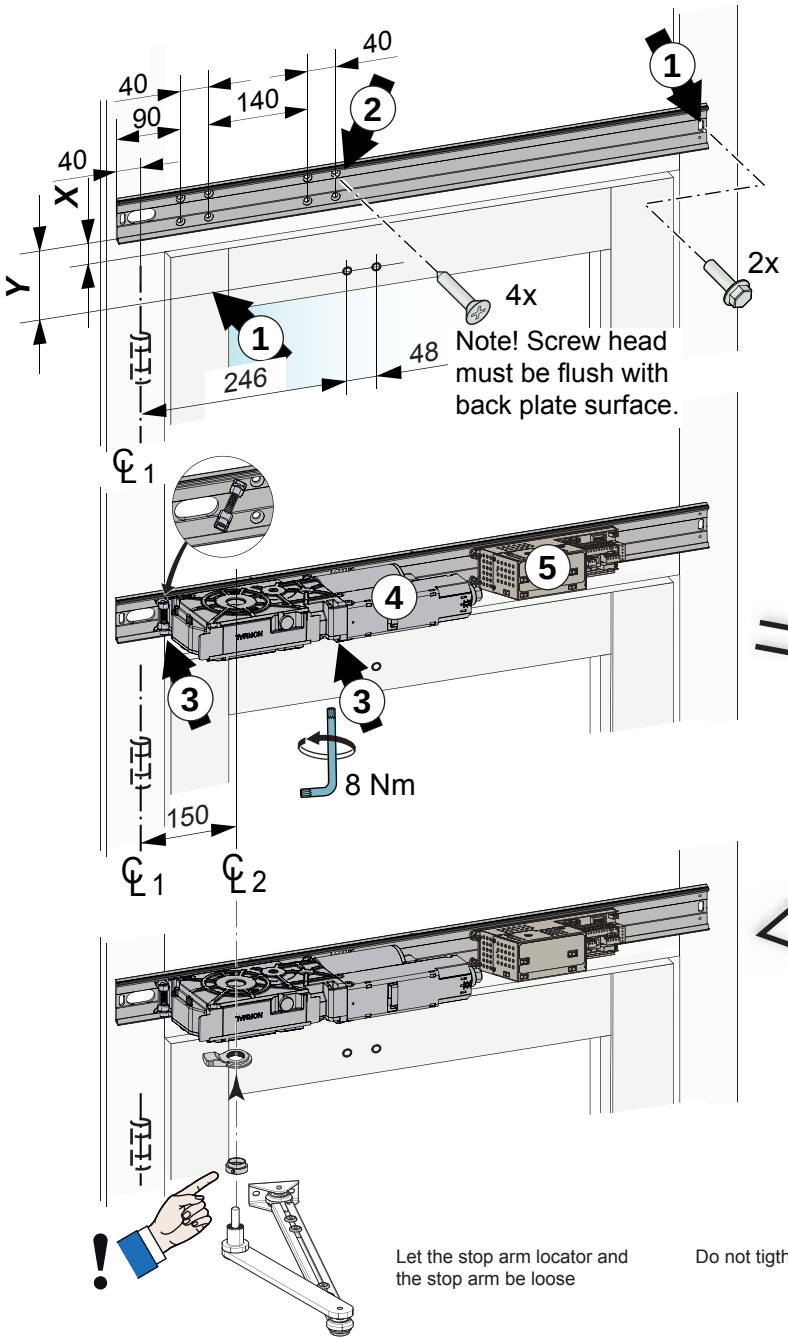

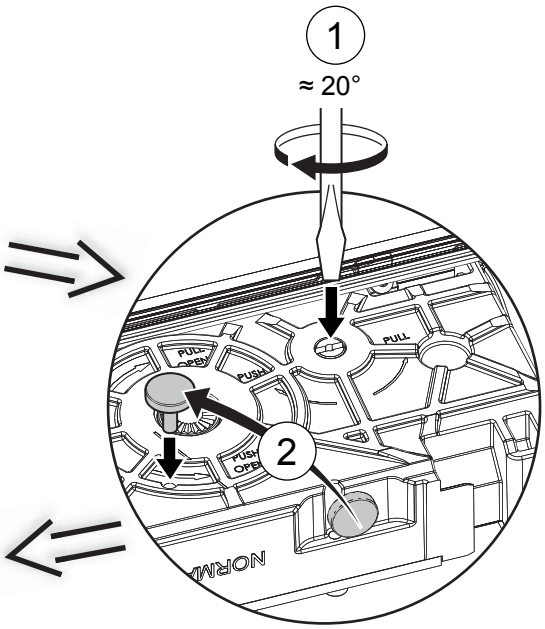

© All rights in and to this material are the sole property of EntreMatic AB. Copying, scanning, alterations or modifications are expressly forbidden without the prior written consent of EntreMatic AB. Rights reserved for changes without prior notice.

Quick Start

EM PSW250

1007913

ENTREMATIC

9.0

1008898-EMen

Align the arm with
the operator mark.

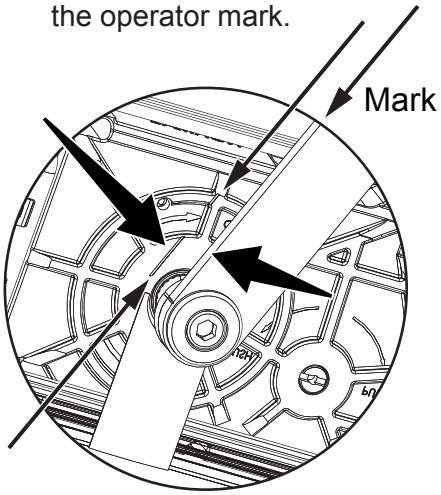

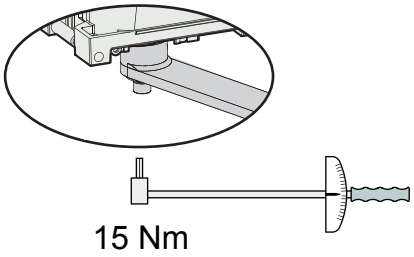

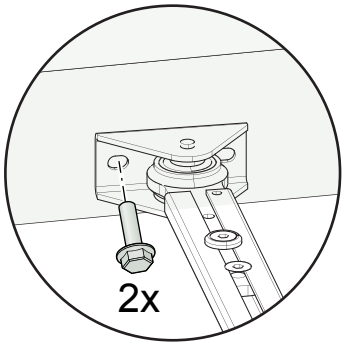

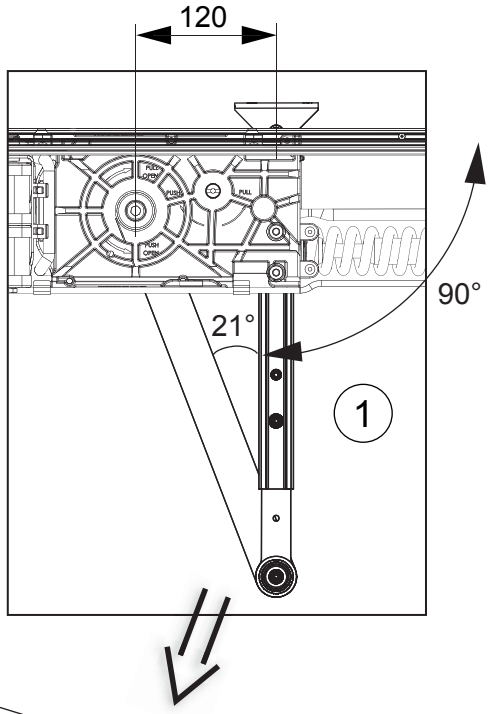

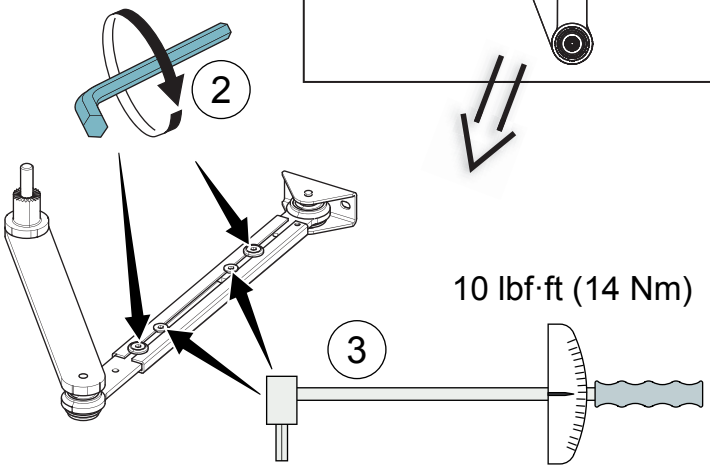

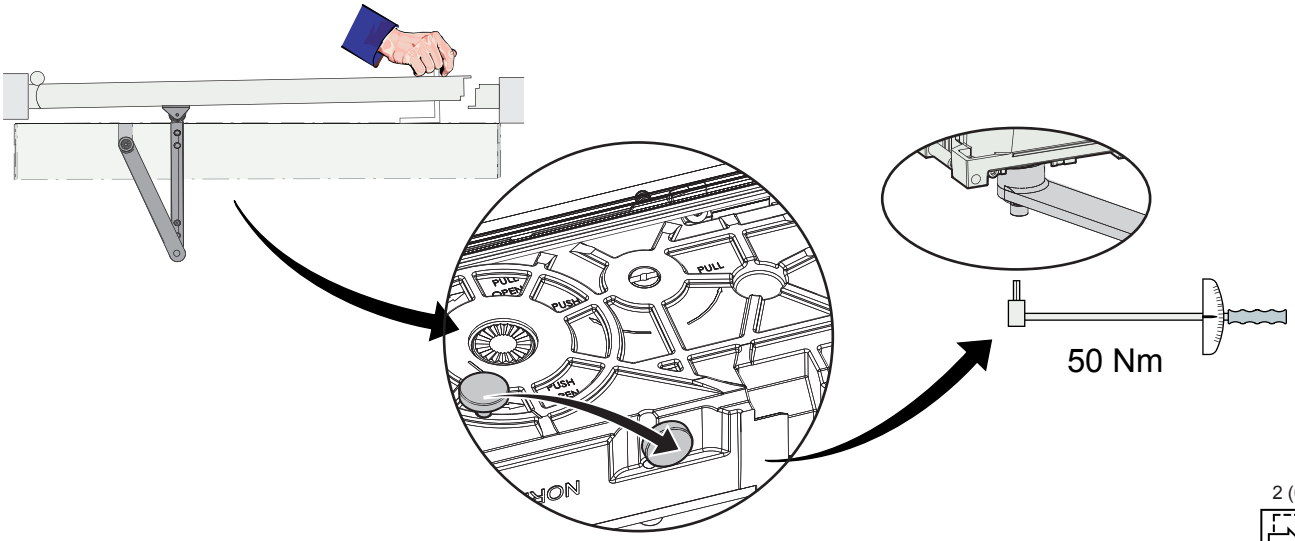

PULL

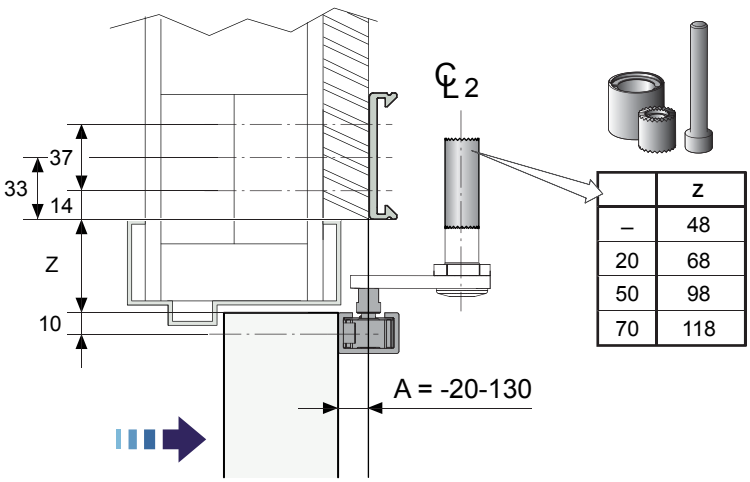

	Z
–	48
20	68
50	98
70	118

DIN Right

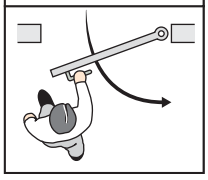

PSW250, Size6 PULL400

https://s3m.io/ftMBJ

10:28

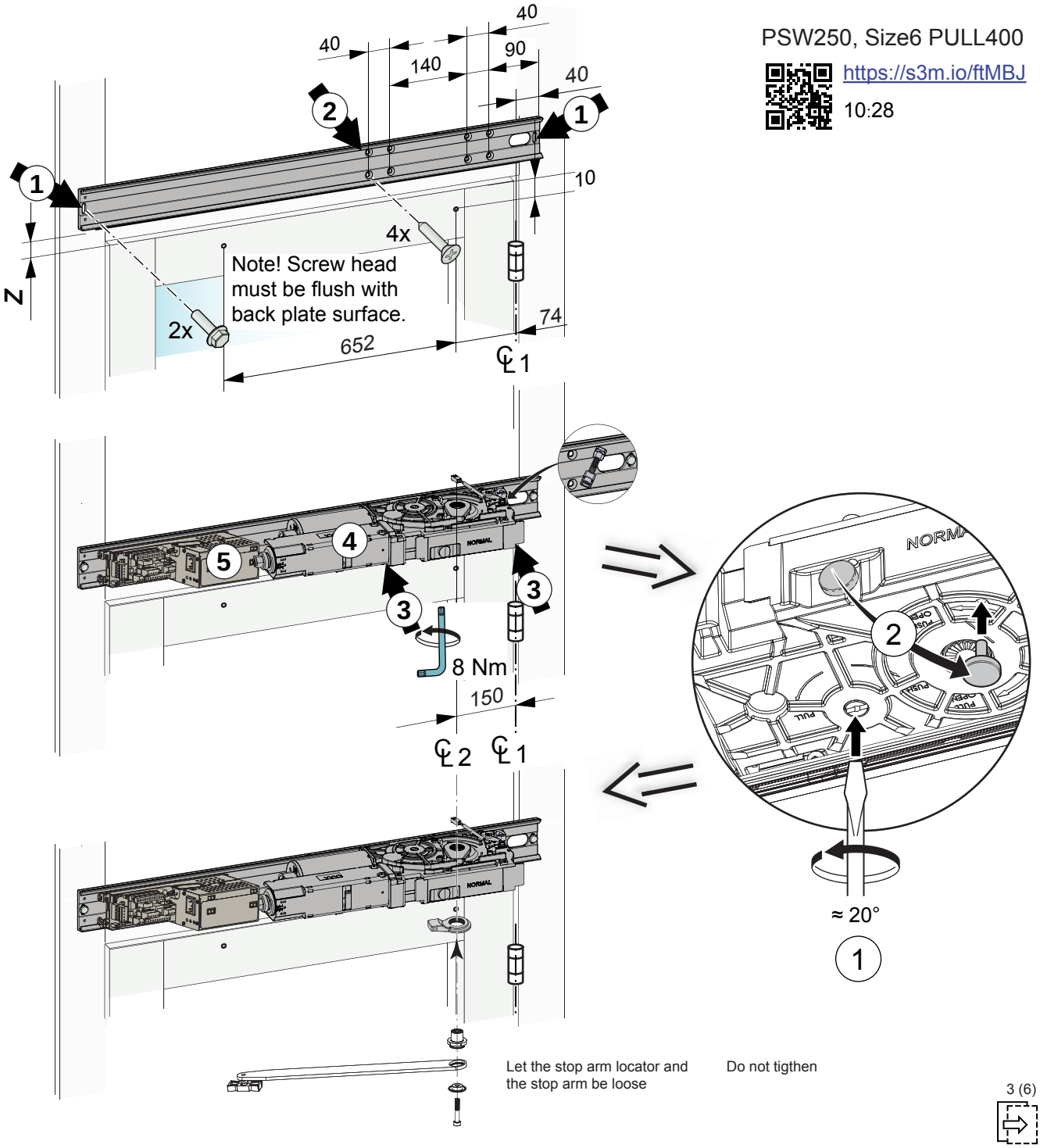

Let the stop arm locator and the stop arm be loose

Do not tigthen

1008898-EMen-9.0

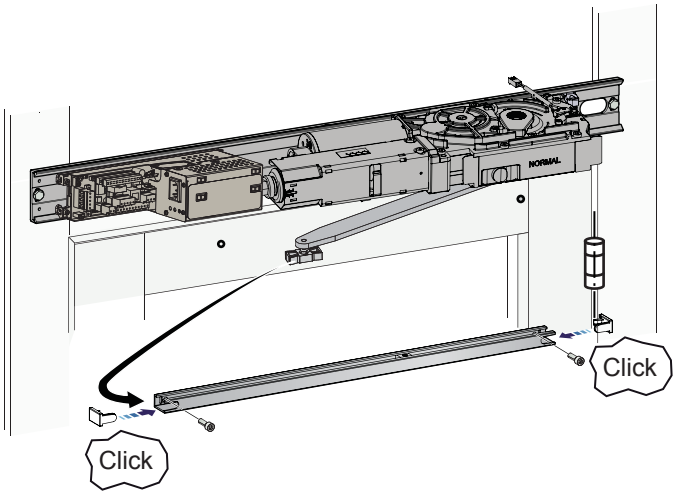

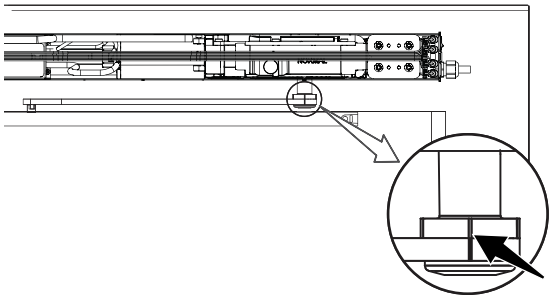

It is important to align the marks correctly. If necessary move one mark at a time. This corresponds to approx. 3° and will give a precision of ±1,5°.

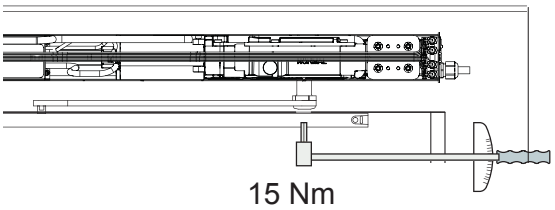

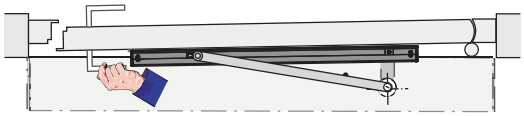

1

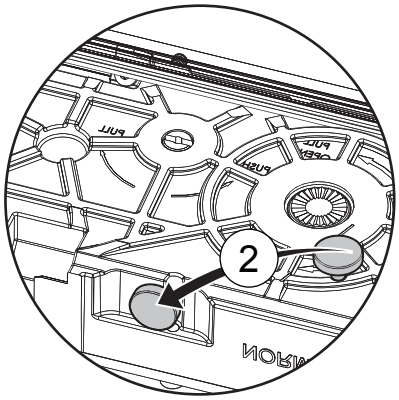

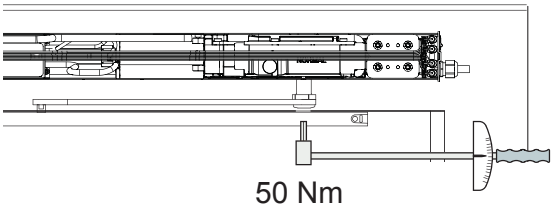

Lock kick at power failure

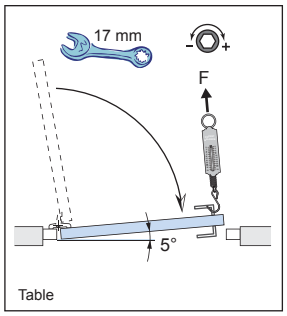

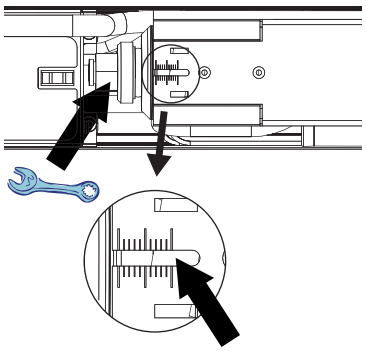

Door closer power size	Recommended door leaf width mm max.	Closing torque Between 0º and 4º		Opening torque Between 0º and 60º
		Nm min.	Nm max.	Nm max.
4	1100	26	<37	62
5	1250	37	<54	83
6	1400	54	<87	134
7	1600	87	<140	215

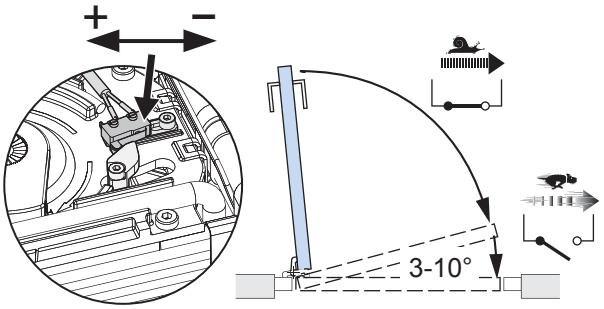

1

2

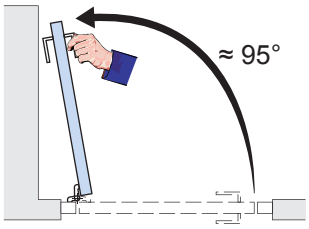

3

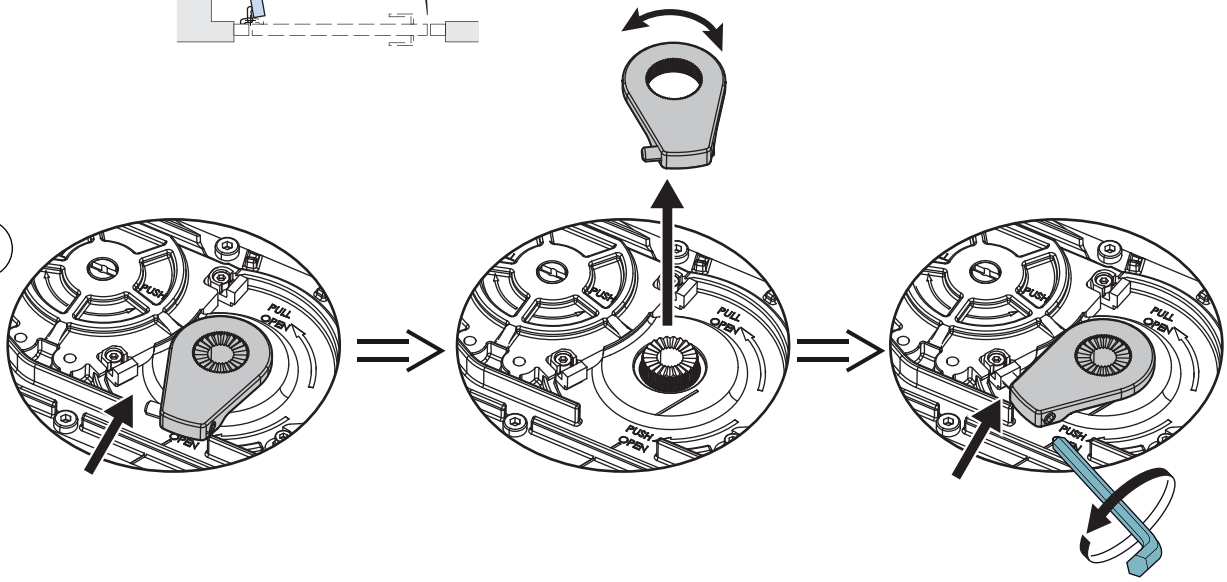

4

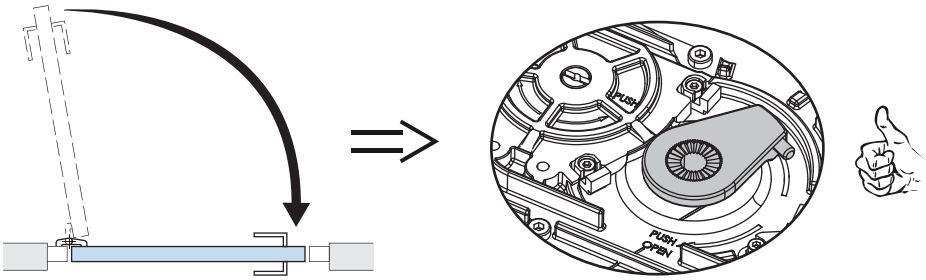

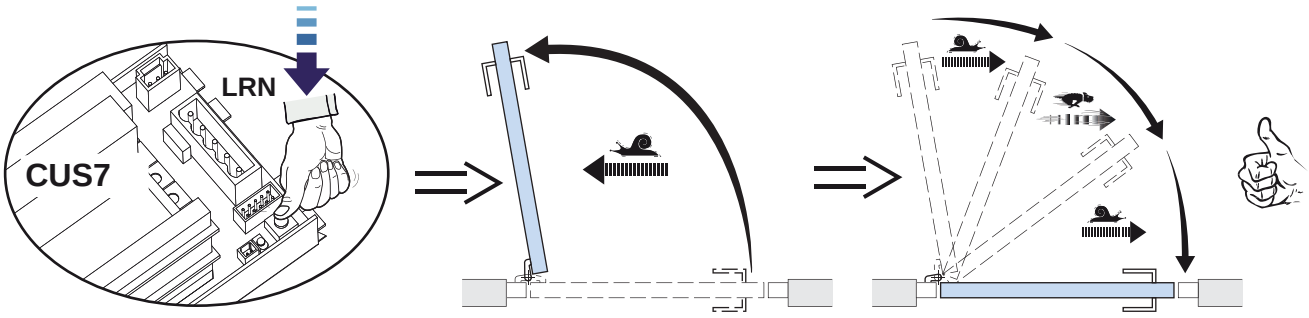

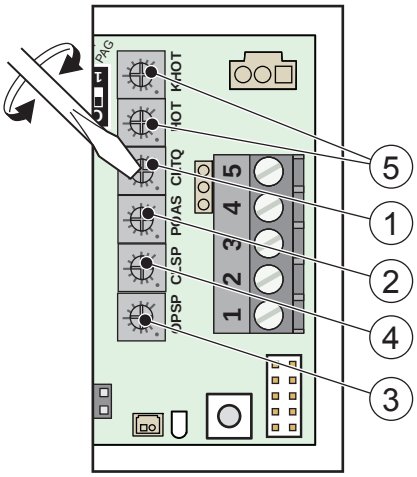

If CLTQ > 0 or if changed

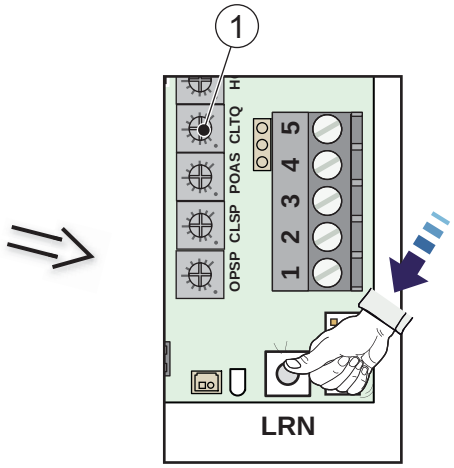

Other applications

PSW250, Sliding push PULL400

https://s3m.io/Shlty

08:48

PSW250, Inverse PUSH335

https://s3m.io/PD9In

09:30

PSW250, Double Acting

https://s3m.io/P4NiH

11:05

PSW250, Coordination unit

https://s3m.io/VMZef

06:05

PSW250, Advanced settings

https://s3m.io/1rjA3

08:13

PSW250, Battery

https://s3m.io/O5in0

04:07

PSW250, Electro-mechanical locking device

https://s3m.io/1Hu7r

01:50

PSW250, Power assist

https://s3m.io/B8sD9

01:52